

Design and Communication Graphics

Leaving Certificate

HomeSchool.ie
ONLINE GRINDS

Subject: Design and Communication Graphics

Lesson 1: Course Overview

1.0 Learning Intentions

We will learn to:

1. Be familiar with the course break down of marks and course content.
2. Understand the layout of the exam paper for both Higher Level and Ordinary Level.
3. Identify key components of the DCG course.
4. Understand what Orthographic Projection is.
5. Identify Plan, Evaluation and End View.
6. Use basic DCG Equipment.

1.1 Homework Task Solution



1.2 DCG Notes and Keywords

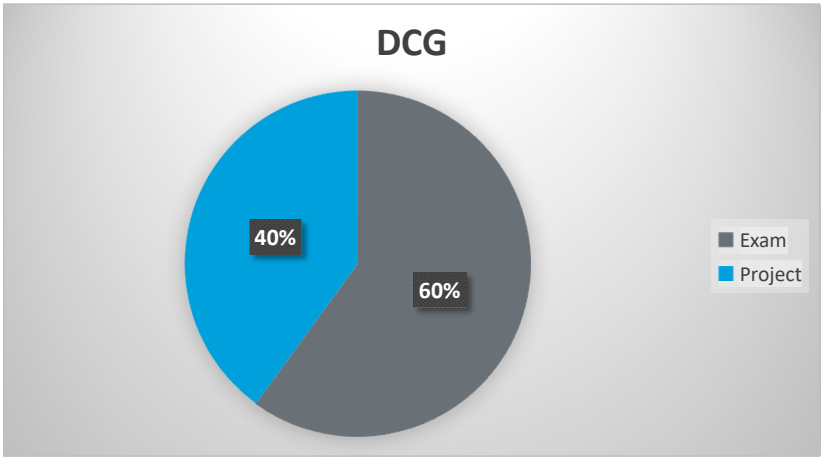

Design and Communication Graphics has taken the place of technical drawing for the Leaving Certificate and provides students with the opportunity for visualizing and comprehending information presented verbally or graphically.

Problem solving and creative thinking skills are developed through the analysis and solution of both 2- and 3-dimensional graphics. Graphics and design are communicated using freehand sketching skills, traditional draughting equipment and CAD.

Problem solving and creative thinking skills are developed through the analysis and solution of both 2- and 3-dimensional graphics. Graphics and design are communicated using freehand sketching skills, traditional draughting equipment and CAD.

There is a great emphasis in the Leaving Certificate course on comprehension, analysis and problem solving. In simple terms you must be able to understand what has to be done, analyse how you are going to approach it and then proceed to solve the problem. It is a very suitable subject for either architecture or engineering it is regarded as a useful asset if you are thinking of a technical course.

As part of the subject, it is intended to incorporate some class trips to a number of companies in the surrounding area to showcase the relevance and importance of DCG as a subject.

A lot of people spend hours upon hours "revising" without really engaging in any subject matter at all. What I mean by this is that if you sit and look at a notes page, past question or worse someone else's solution to a question with nothing but your eyes you are not revising properly and won't remember much of what you looked at. While revising you need to engage with the topics/concepts which means that you should always be drawing, sketching, annotating, highlighting, etc. You didn't learn the concepts by only looking at the notes in your book, why would you revise like that?

The Leaving Certificate exam for DCG is a 3 hour paper that is divided into 3 sections:

A - Short questions from Core. Answer 3 out of 4. **12 mins**

B - Long questions from Core. Answer 2 out of 3. **35 mins**

C - Long questions from Applied Graphics. Answer the 2 you have studied **35 mins**

What should be in each Output? (Higher Level)

The pages below outline how the DCG project was marked in 2013 and provides several key items to check when preparing your own project. It is important to note that the marking scheme may vary in future years and the checklist provided is not exhaustive.

Output 1 - Design Research (15 marks)
Output 2 - Design Feature Comparison (15 marks)
Output 3 - Freehand Graphics (20 marks)
Output 4 - Solidworks Parts, Assembly, Drawings and eDrawing files (28 marks)
Output 5 - Hardcopy Output from Solidworks (15 marks)
Output 6 - Photorealistic Representation (7 marks)
Output 7 - Graphical Exploration of Design Solutions (25 marks)
Output 8 - Presentation of Modification / Concept Design (10 marks)
Output 9 - Hardcopy Output from Solidworks (25 marks)

Breakdown of Marks

Here is an approximate breakdown of the marks for the DCG project.
A lot of the CAD marks are for your drawings, don't get obsessed with Solidworks!

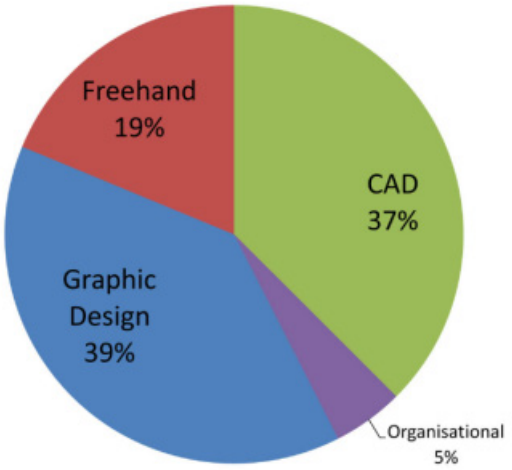

Arrangements for the completion and submission of the student assignment.

The completion date for the DCG student assignment is 20th January 2023. As examination candidate numbers will not be available at this time, students should use their name and date of birth as a means of identification on their design portfolio and on the main folder contained on the USB.

The name of this folder should be in the following format "DCG SA 2023 (Student Name Date of birth)". E.g. "DCG SA 2023(John Smith 04-07-1999)".
Please note the use of dashes in the date of birth format

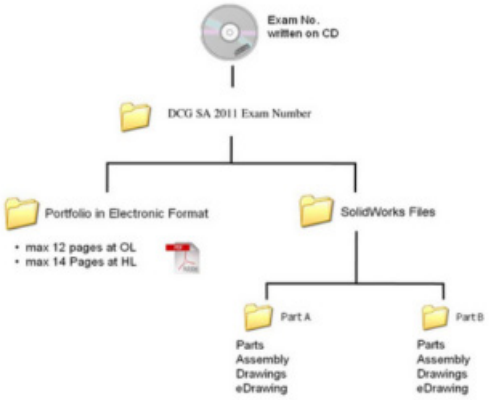

Out put		Heading	Description	Suggested no. of A3 pages	Marks
Presentation, thought process, reflection and factor of difficulty will be considered throughout.	**Part A - Existing Artefact**				
	1	Design research & Design feature comaparision	Exploration of brief and presentation of existing artefacts in graphic format. Select 2 images and illustrate/explain the main design features. Insert the main dimensions. Compare and contrast the main design features of both using suitable freehand sketches and other presentation techniques.	1 - 2	50
	2	Freehand graphical representation	Choose one of the artefacts and make a detailed graphical presentation of this artefact. This should include a rendered freehand presentation quality drawing in 3D format.	1	
	3	Solidworks Parts, Assembly, Drawing and eDrawing files	Detailed computer model comprising at least 5 parts but no more than 10 parts, an Assembly, a Drawing and an eDrawing of the selected artefact. Economy of design, design intent and the required filing structure will be considered in the marking process.	Electronic Solid-works files	60
	4	Hardcopy output from Solidworkds	Detailed orthographic views. Pictorial View. Exploded View.	1 - 2	
	Part B - Design modification or Concept Design				
	5	Graphical exploration of design solutions	Analysis of brief and graphic illustration of possible solutions (s). Justification for your chosen solution.	1 - 2	50
	6	Presentation of Modi-fication/ Concepet Design	Detailed graphical presentation of the design Modification / Concept Design. This should include a rendered freehand presentation quality drawing in 3D format.	1	
	7	Hardcoy output from Solidworkds	CAD model (Part/Assembly & Drawing) and associated hardcopies to include appropriately detailed orthographic, rendered pictorial and photorealistic view(s) to communicate your chosen design.	1 - 2 (Plus electronic Solidwords files)	
				Overall Total	**8 pages**	**160**

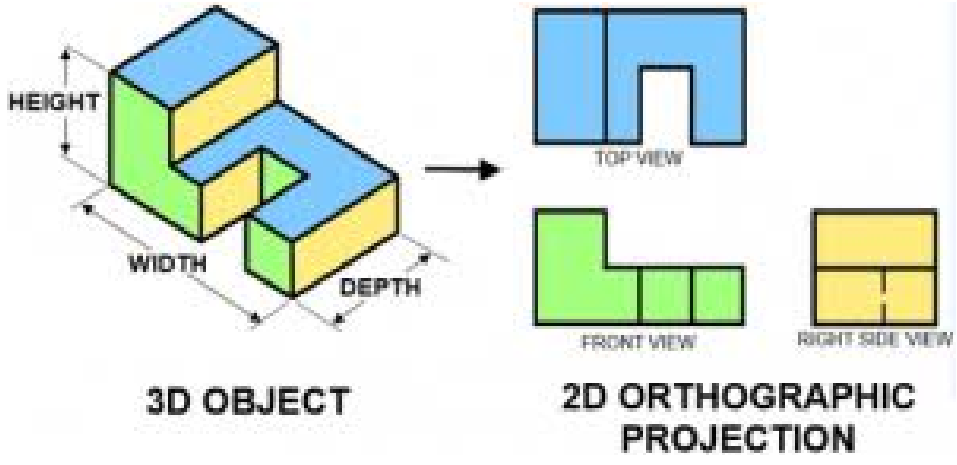

Orthographic Projection Model

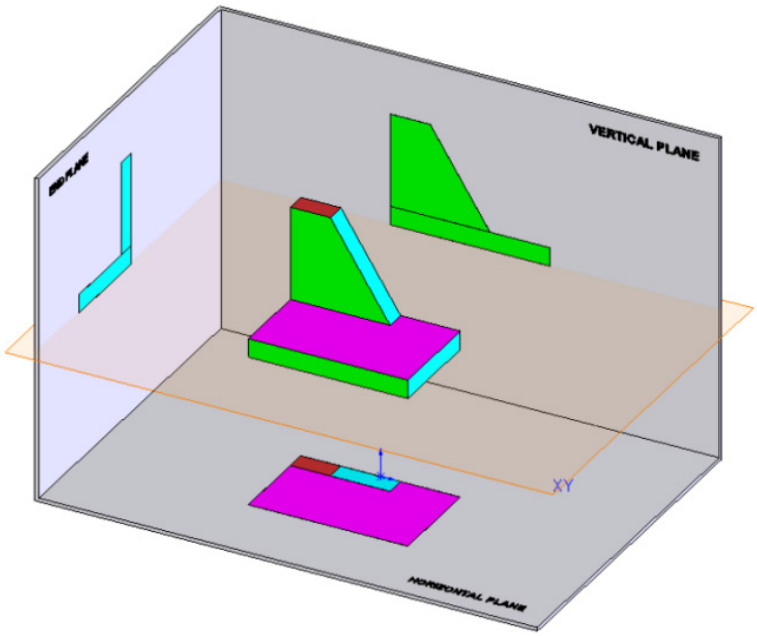

1.3 Exam Questions and Solution

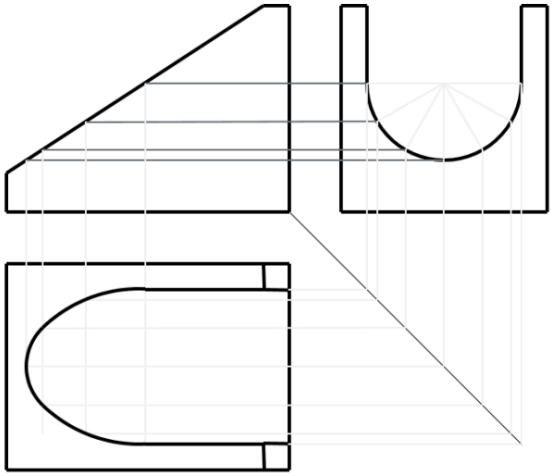

Orthographic Projection

1. The elevation is viewing the front of the object, the _____ is viewing the top of the object from above.
2. The _____ lies directly below the front elevation.
3. The vertical lines connect the _____ to the plan.
4. The horizontal lines connect the elevation to the _____.
5. The _____ degree lines connect the plan to the end view.
6. Hidden _____ occurs when a feature of an object cannot be seen in one or more views.
7. The end elevation looking from the left lies directly to the _____ of the front elevation.

a. The image below shows the design of a similar action camera.

Draw:

i. An elevation in the direction of arrow **A**.
ii. A plan projected from the elevation.
iii. An end view in the direction of arrow **B**.
iv. Determine the true shape of surface **S**.

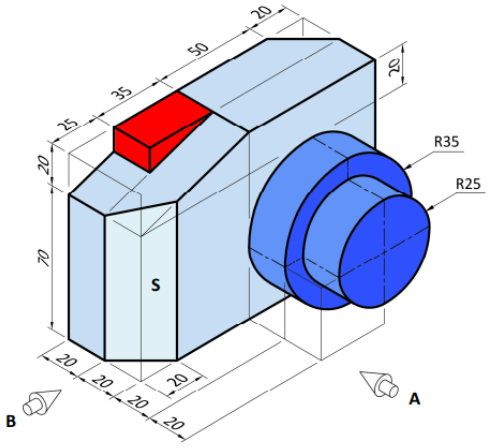

Question		
Question (a) (i)	**Elevation (13)**	
	6 2 4 1	Camera outline — 6 lines **(6 x 1 mark)** Button outline — 2 lines **(2 x 1 mark)** Lens outline — **(4marks)** 1 for each location, 1 for each circle Hidden Detail —1 line **(1 mark)**
Question (a) (ii)	**Plan (15)**	
	7 2 6	Camera outline — 7 lines **(7 x 1 mark)** Button outline — 2 lines **(2 x 1 mark)** Lens outline — 6 lines **(6 x 1 mark)**
Question (a) (iii)	**End View (16)**	
	7 2 6 1	Camera outline — 7 lines **(7 x 1 mark)** Button outline — 2 lines **(2 x 1 mark)** Lens outline — 6 lines **(6 x 1 mark)** Hidden Detail — 1 line **(1 mark)**

1.4 Homework Task

A pictorial view of mobile lunar camera is shown in **Fig. 1**.
Also shown is a 3D graphic of the camera.

a. Draw an elevation in the direction of arrow **A**.

b. Project a plan from the elevation.

c. Project an end view in the direction of arrow **B**.

d. Determine the true shape of surface **S**.

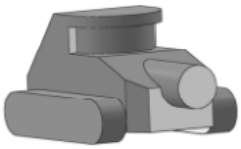

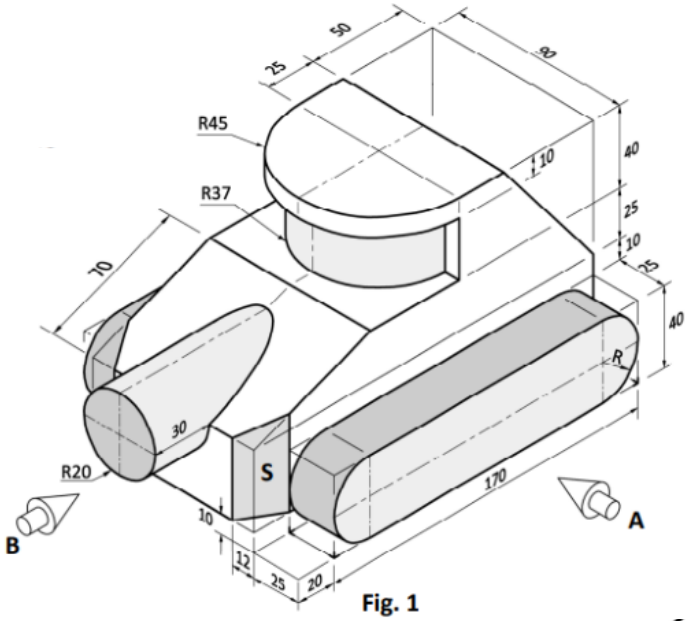

Fig. 1